Product datasheet

Specifications

EcoStruxure Panel Server - universal wireless, concentrator modbus gateway 24 VDC

PAS600L

Price: 10 428,06 ZAR

Main

Range	EcoStruxure
Product name	Panel Server Universal
Product or component type	Gateway
Device short name	PAS600L
[Us] rated supply voltage	24 V DC
Communication gateway	Ethernet TCP/IP to wireless devices Ethernet/serial

Complementary

Maximum power consumption in W	3 W 24 V
Communication network type	Ethernet, 10/100BASE-T Wi-Fi2.4 GHz Wireless, IEEE 802.15.4 Modbus RTU, Modbus RTU client even/odd or none parity, at 1.2...115.2 kbit/s
Communication port protocol	Modbus TCP DHCP HTTPS NTP/SNTP IPv4 IPv6 TCP/IP
Communication port support	2 RJ45: ETHERNET Screw terminal block: RS485
Number of server	32 server device(s)Modbus RTU - without repeater 128 server device(s)Modbus RTU - with repeater 128 server device(s)Modbus TCP/IP 40 server device(s)wireless - mixed 85 server device(s)wireless - depending on configuration
Number of clients	64 Modbus TCP/IP
Memory capacity	512 MB NAND
Number of inputs	2 digital
Connections - terminals	Discrete I/O: screw terminal block (top) 0.14…1.5 mm² cable(s) Power supply: screw terminal block (top) 1.5…2.5 mm² cable(s) Communication: screw terminal block (bottom) 0.14…1.5 mm² cable(s)
Tightening torque	Discrete I/O: 0.25 N.m Power supply: 0.6 N.m Communication: 0.25 N.m
Wire stripping length	Power supply: 7 mm Communication: 7 mm Discrete I/O: 7 mm
Mounting mode	Clip-on

Excluding VAT and subject to change. Please check with your local distributor through "Where to buy"

Disclaimer: This documentation is not intended as a substitute for and is not to be used for determining suitability or reliability of these products for specific user applications

Mounting support	DIN rail
Product certifications	CE cULus CB RCM UKCA FCC IC DNV Marine ANSI RF IACS E10
Standards	IEC 61010 IEC 61010-1 IEC 61010-2-201 UL 61010 UL 61010-1 UL 61010-2-201 EN 61010-1 EN 61010-2-201 CAN/CSA C22.2 No. 61010-1-12 CAN/CSA C22.2 No. 61010-2-201 IEC 62974-1 IEC 61326-1 EN 61326-1 ETSI EN 301 489-1 ETSI EN 301 489-17 EN 301-893 EN 55032 CISPR 11 ETSI EN 300 328 IEEE 802.15.4 IEEE 802.11a/b/g/n IEEE 802.3 af/at FCC CFR 47 part 15 class A EN 62311 IEC 62311 ANSI C63.10 IEC 60945 EN 62974-1 DNVGL-GC-0339
Depth	70.2 mm
Height	93 mm
Width	72 mm
Net weight	181 g
Data recording	Data logs
Data buffer	1 month(s)
Function available	Embedded web page for configuration and upgrade Diagnosis capabilities Diagnostic report Diagnostics on communication Energy management With integrated web server Firmware update Backup/restore configuration Configurable event Event Logger
Product specific application	Wireless Schneider Electric devices ecosystem
Topology	Separated Ethernet network Switched Ethernet network
Web services	HTTPS server SFTP publication (CSV / JSON) HTTPS publication (CSV / JSON)

Communication service	Device Profile for Web Services (DPWS) Modbus TCP client Modbus TCP server SNTP client DHCP client DHCP server
Commissioning interface	EcoStruxure Power Commission desktop EcoStruxure Power Commission web (for third party device integration) Web page
Realtime clock	With RTC-battery set Without any user calibration
Time synchronisation protocol	NTP SNTP
Range compatibility	EcoStruxure Facility Expert EcoStruxure Building Operation EcoStruxure Power Operation EcoStruxure Power Monitoring Expert EcoStruxure Asset Advisor EcoStruxure Energy Hub EcoStruxure Resource Advisor

Environment

Relative humidity	5…95 %
IP degree of protection	IP40 (front face) IP20 (casing)
Ambient air temperature for operation	-25…70 °C at < 2000 m -25…60 °C at 2000...4000 m
Ambient air temperature for storage	-40…85 °C
Pollution degree	3
Operating altitude	0...4000 m

Packing Units

Unit Type of Package 1	PCE
Number of Units in Package 1	1
Package 1 Height	8.800 cm
Package 1 Width	9.000 cm
Package 1 Length	11.000 cm
Package 1 Weight	265.000 g
Unit Type of Package 2	S03
Number of Units in Package 2	27
Package 2 Height	30.000 cm
Package 2 Width	30.000 cm
Package 2 Length	40.000 cm
Package 2 Weight	7.782 kg

Sustainability

Green Premium™ label is Schneider Electric's commitment to delivering products with best-in-class environmental performance. Green Premium promises compliance with the latest regulations, transparency on environmental impacts, as well as circular and low-CO_2 products.

Guide to assessing product sustainability is a white paper that clarifies global eco-label standards and how to interpret environmental declarations.

Learn more about Green Premium >

Guide to assess a product's sustainability >

Transparency RoHS/REACh

Well-being performance

Rohs Exemption Information	Yes

Certifications & Standards

Reach Regulation	REACh Declaration
Eu Rohs Directive	Compliant with Exemptions
China Rohs Regulation	China RoHS declaration
Environmental Disclosure	Product Environmental Profile
Weee	The product must be disposed on European Union markets following specific waste collection and never end up in rubbish bins
Circularity Profile	End of Life Information

Technical Illustration

Dimensions

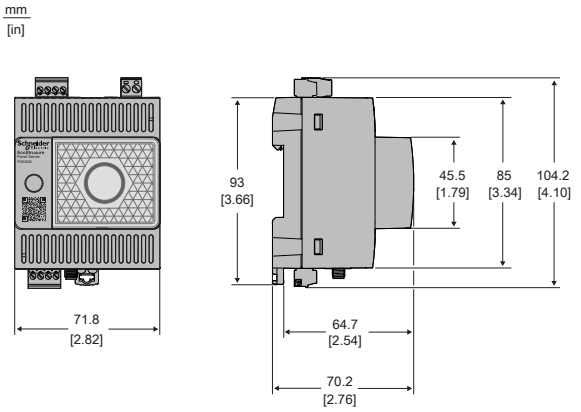

Technical Illustration
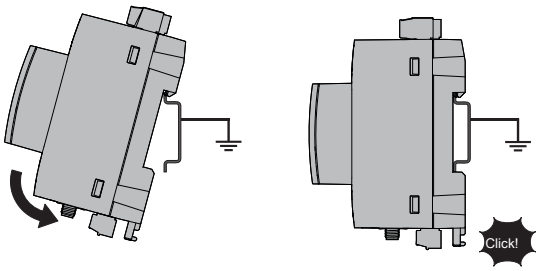
Product installation